受　控

SPECIFICATION

1. SCOPE

This specification is applied to the piezo-element.

2. SPECIFICATION (at25℃)

2.1 Resonant Frequency	:	6.0~7.5 KHz
2.2 Resonant Resistace	:	300 Ω max
2.3 Capacitance	:	14000 pF± 30% at 100Hz
2.4 Input Voltage	:	30 Vp-p max
2.5 Operating Temperature	:	-30~+95℃
2.6 Storage Temperature	:	-40~+105℃
3. DIMENSION	:	as per figure

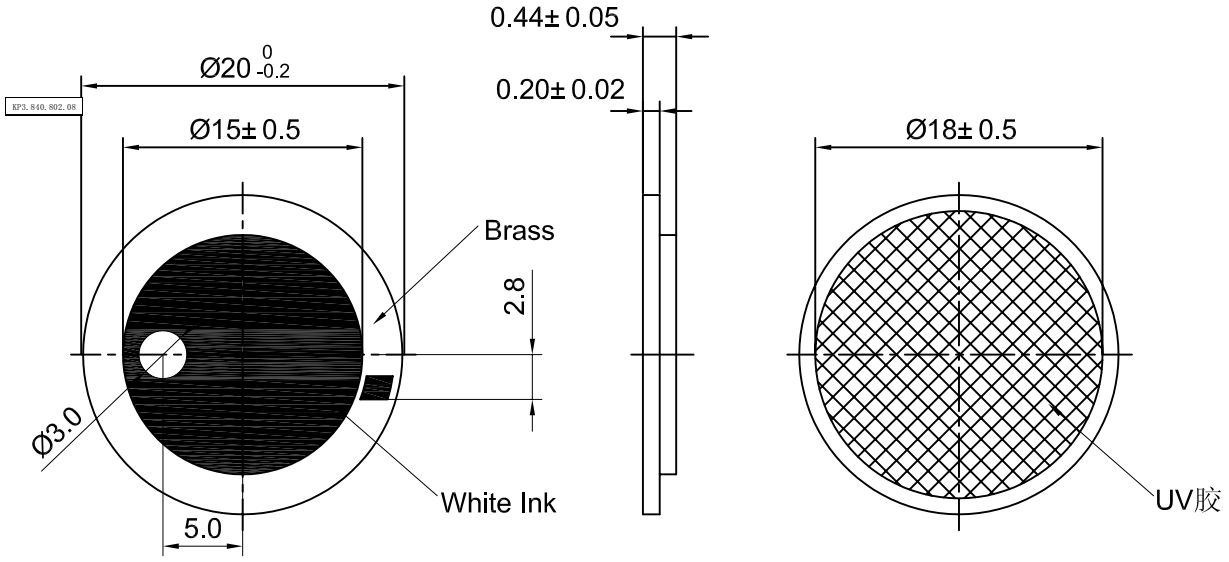

备注：此蜂鸣片正面刷白色阻焊油墨，背面刷透明UV胶

TOLERANCES UNLESS NOTED OTHERWISE .X ± .XX ± .XXX ± 90° FORMED +2° ANGLES -1°	DRAWN	汪 逸	KEPO MODEL NO.	CUSTOMER			
	DESIGN		MFT-20T-6.0A1 （White）				
	CHECKED			CUSTOMER NO.			
	APPROVED	徐锦生	DWG NO.				
	DATE	13.01.10	KP3.840.802.08	VER	1.2	SCALE	
	CONTRACT NO.			UNIT	mm	SHEET	
FIRST ANGLE PROJECTION	AGENCY APPROVAL		KEPO CO.,LTD.	TEL:(+86)574-88370330 FAX:(+86)574-88370329			